| DATE | REV | ECN | APP'D. BY |
|---|---|---|---|
| 11-14-03 | X0 | - | - |
| 7-22-04 | A0 | 6495 | RGC |
| 11-14-05 | A1 | 7376 | TRM |
| 1-16-06 | A2 | 7436 | JM |

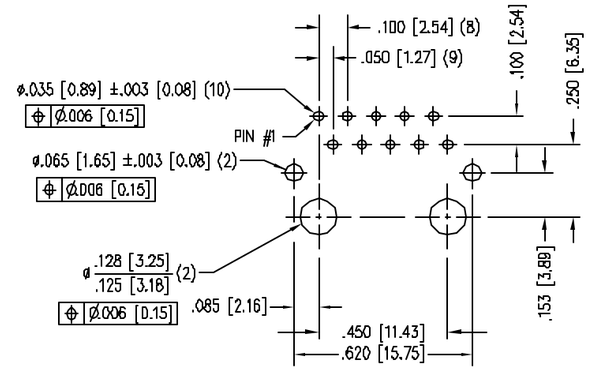


P.C.B. RECOMMENDED HOLE LAYOUT
SEEN FROM COMPONENT SIDE

ALL CENTERLINE DIMENSIONS ARE BASIC.

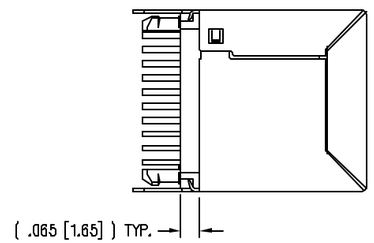


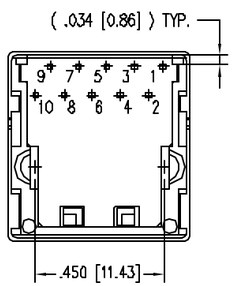


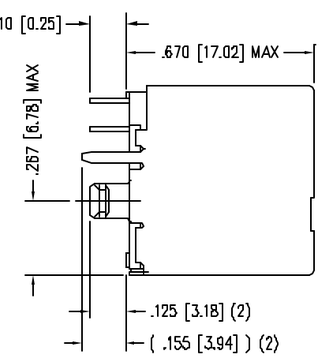


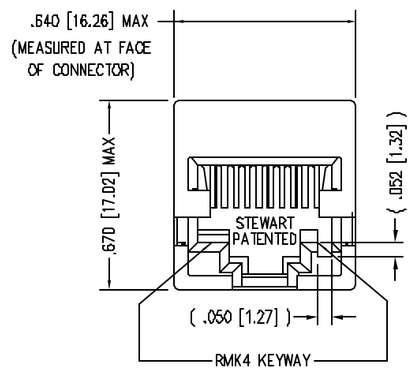


NOTES:

1. CONNECTOR MATERIALS:
   HOUSING: THERMOPLASTIC UL94 V-0
   CONTACTS/SHIELD: COPPER ALLOY
   SHIELD PLATING: NICKEL OR TIN
   CONTACT PLATING: SELECTIVE GOLD IN CONTACT AREA
   SEE CHART FOR PART NUMBER
2. FOR PRODUCT SPECIFICATION SEE PRD26-01.
3. DIMENSIONS AND TOLERANCES COMPLY WITH FCC/CFR 47, PART 68.

| | |
|---|---|
| 30 MICRO-INCHES [0.76um] | SS-65100-046 |
| CONTACT PLATING IN MATING AREA | PART NUMBER |

THIRD ANGLE PROJECTION

DO NOT SCALE DRAWING

DRAWING IS SUBJECT TO CHANGE WITHOUT NOTICE

DIMENSIONS: INCHES [METRIC]

UNLESS OTHERWISE SPECIFIED TOLERANCES ARE ±.005 [0.13] ANGLES ARE ± 1°

SHEET NO. 1 OF 1


**Bel Stewart Connector**

11118 Susquehanna Trail South
Glen Rock, PA 17327-9199
(717) 235-7512 Fax: (717) 235-7954 http://www.stewartconnector.com


TITLE: TEN CONTACT, 10 POSITION, VERTICAL MOUNT SHIELDED JACK, NON-FLANGED, RMK4 KEYING OPTION


THIS DRAWING AND THE SUBJECT MATTER SHOWN THEREON ARE CONFIDENTIAL AND THE PROPRIETARY PROPERTY OF BEL STEWART CONNECTOR AND SHALL NOT BE REPRODUCED, COPIED, OR USED IN ANY MANNER WITHOUT PRIOR WRITTEN CONSENT OF BEL STEWART CONNECTOR. THE SUBJECT MATTER MAY BE PATENTED OR A PATENT MAY BE PENDING.


| | | | |
|---|---|---|---|
| DRN BY: | TRM | DATE | 11-14-03 |
| APPD BY: | RGC | DATE | 11-17-03 |
| DWG NO. | CT650125 | REV. | A2 |

RoHS 2002/95/EC

REV. 7/3/03

AutoCAD