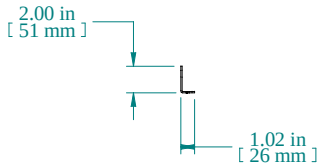

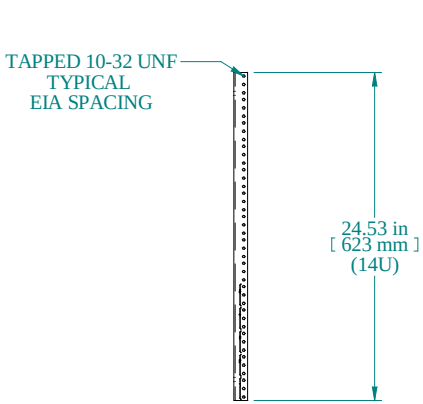

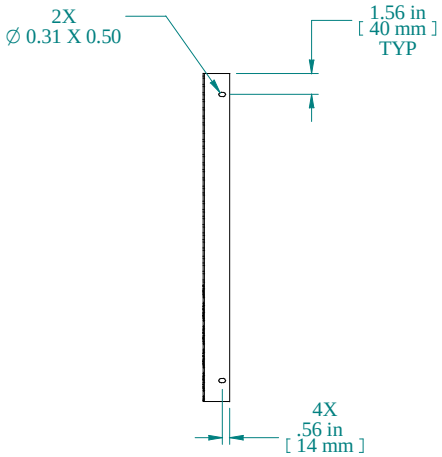

PART NUMBERS	
CLTR14U	PAINTED THIN FILM BLACK

NOTES
19" Panel Rails with Square Holes (pair)
White Silkscreened U Markings

Data subject to change without notice. Isometric drawing not to scale.

HAMMOND MANUFACTURING™

www.hammondmfg.com

PART NO. CLTR14U